# BUL810

## High voltage fast-switching NPN power transistor

## Features

- High voltage capability
- Low spread of dynamic parameters
- Low base-drive requirements
- Very high switching speed
- Fully characterized at 125 °C

## Applications

- Electronic transformer for halogen lamps
- Electronic ballast for fluorescent lighting
- Switch mode power supplies.

## Description

The BUL810 is manufactured using high voltage multiepitaxial mesa technology for cost-effective high performance. It uses a hollow emitter structure to enhance switching speeds.

The BUL series is designed for use in lighting applications and low cost switch-mode power supplies.

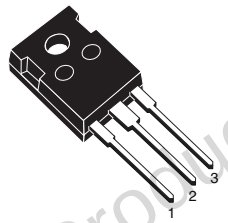


TO-247

**Figure 1. Internal schematic diagram**

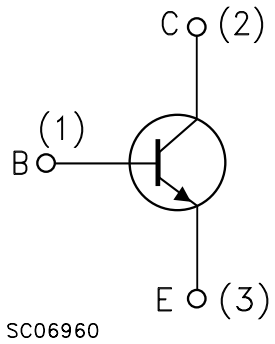


Obsolete Product(s) - Obsolete Product(s)

**Table 1. Device summary**

| Order code | Marking | Package | Packaging |
|---|---|---|---|
| BUL810 | BUL810 | TO-247 | Tube |

# 1 Electrical ratings

**Table 2. Absolute maximum ratings**

| Symbol | Parameter | Value | Unit |
|---|---|---|---|
| $V_{CES}$ | Collector-emitter voltage ($V_{BE}$ = 0) | 1000 | V |
| $V_{CEO}$ | Collector-emitter voltage ($I_B$ = 0) | 450 | V |
| $V_{EBO}$ | Emitter-base voltage ($I_C$ = 0) | 9 | V |
| $I_C$ | Collector current | 15 | A |
| $I_{CM}$ | Collector peak current ($t_P$ < 5 ms) | 22 | A |
| $I_B$ | Base current | 5 | A |
| $I_{BM}$ | Base peak current ($t_P$ < 5 ms) | 10 | A |
| $P_{tot}$ | Total dissipation at $T_c$ = 25 °C | 125 | W |
| $T_{stg}$ | Storage temperature | -65 to 150 | °C |
| $T_J$ | Max. operating junction temperature | 150 | °C |

**Table 3. Thermal data**

| Symbol | Parameter | | Value | Unit |
|---|---|---|---|---|
| $R_{thj-case}$ | Thermal resistance junction-case | max | 1 | °C/W |
| $R_{thj-amb}$ | Thermal resistance junction-ambient | max | 30 | °C/W |

Obsolete Product(s) - Obsolete Product(s)

# 2 Electrical characteristics

($T_{case}$ = 25 °C unless otherwise specified)

**Table 4. Electrical characteristics**

| Symbol | Parameter | Test conditions | Min. | Typ. | Max. | Unit |
|---|---|---|---|---|---|---|
| $I_{CES}$ | Collector cut-off current ($V_{BE}$ = 0) | $V_{CE}$ = 1000 V<br>$V_{CE}$ = 1000 V $T_C$ = 125 °C | | | 100<br>500 | µA<br>µA |
| $I_{CEO}$ | Collector cut-off current ($I_B$ = 0) | $V_{CE}$ = 450 V | | | 250 | µA |
| $V_{CEO(sus)}$ (1) | Collector-emitter sustaining voltage ($I_B$ = 0) | $I_C$ = 100 mA | 450 | | | V |
| $V_{EBO}$ | Emitter-base voltage ($I_C$ = 0) | $I_E$ = 10 mA | 9 | | | V |
| $V_{CE(sat)}$ (1) | Collector-emitter saturation voltage | $I_C$ = 5 A $I_B$ = 1 A<br>$I_C$ = 8 A $I_B$ = 1.6 A<br>$I_C$ = 12 A $I_B$ = 2.4 A | | | 1<br>1.5<br>5 | V<br>V<br>V |
| $V_{BE(sat)}$ (1) | Base-emitter saturation voltage | $I_C$ = 5 A $I_B$ = 1 A<br>$I_C$ = 8 A $I_B$ = 1.6 A | | | 1.3<br>1.6 | V<br>V |
| $h_{FE}$ (1) | DC current gain | $I_C$ = 10 mA $V_{CE}$ = 5 V<br>$I_C$ = 5 A $V_{CE}$ = 5 V | 10<br>10 | | <br>40 | |
| $t_s$<br>$t_f$ | Inductive load<br>Storage time<br>Fall time | $I_C$ = 8 A $I_{B1}$ = 1.6 A<br>$V_{CL}$ = 350 V L = 200 µH<br>$V_{BE(off)}$ = -5 V $R_{BB}$ = 0.4 Ω | | <br>1.5<br>55 | <br>2.3<br>110 | <br>µs<br>ns |
| $t_s$<br>$t_f$ | Inductive load<br>Storage time<br>Fall time | $I_C$ = 8 A $I_{B1}$ = 1.6 A<br>$V_{CL}$ = 350 V L = 200 µH<br>$V_{BE(off)}$ = -5 V $R_{BB}$ = 0.4 Ω<br>$T_c$ = 100 °C | | <br>1.9<br>80 | | <br>µs<br>ns |

1. *Pulse duration = 300 µs, duty cycle ≤1.5%*

Obsolete Product(s) - Obsolete Product(s)

## 2.1 Electrical characteristics (curves)

**Figure 2. Safe operating area**

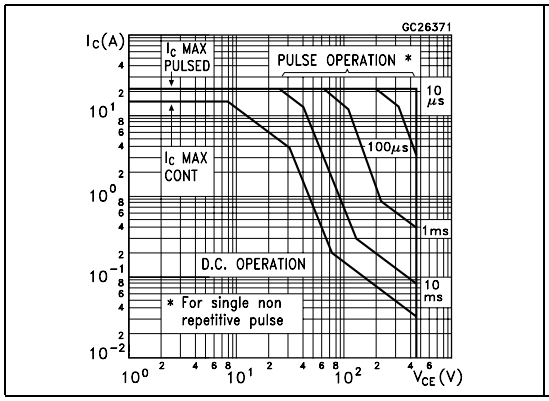


**Figure 3. Derating curve**

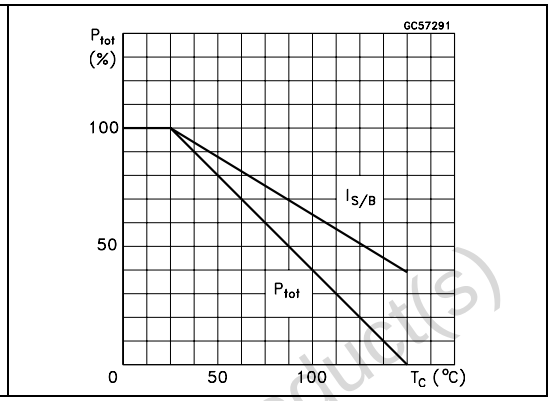


**Figure 4. DC current gain**

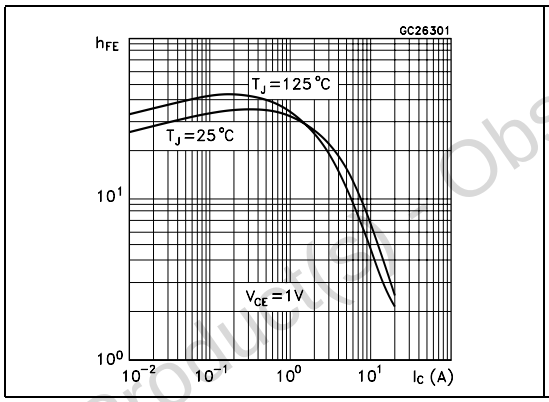


**Figure 5. DC current gain**

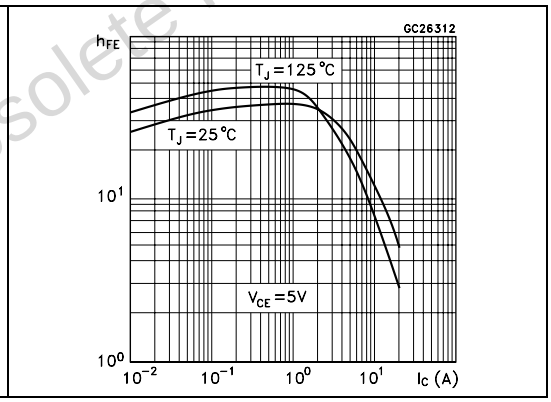


**Figure 6. Collector-emitter saturation voltage**

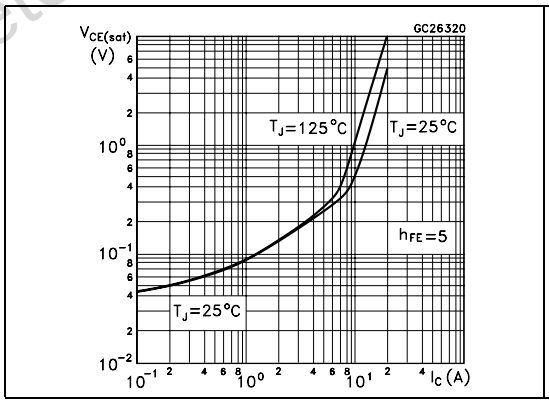


**Figure 7. Base-emitter saturation voltage**

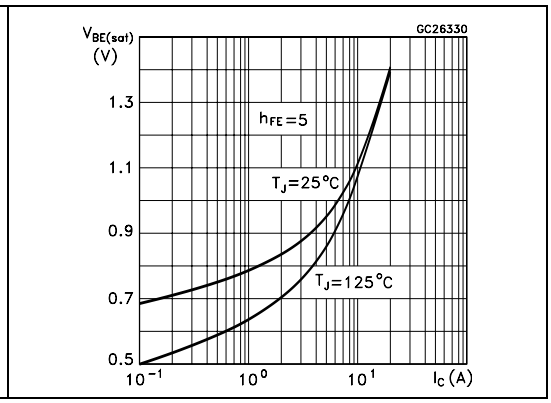


Obsolete Product(s) - Obsolete Product(s)

**Figure 8. Inductive load fall time**

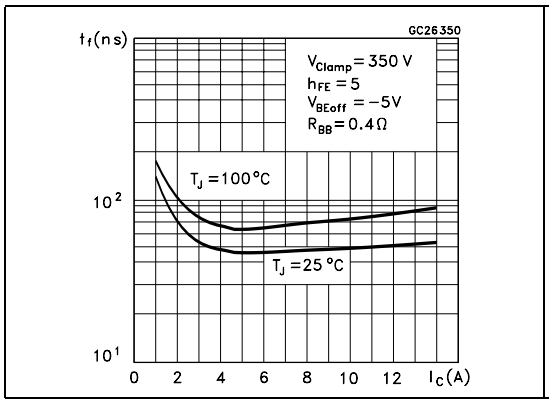


**Figure 9. Inductive storage fall time**

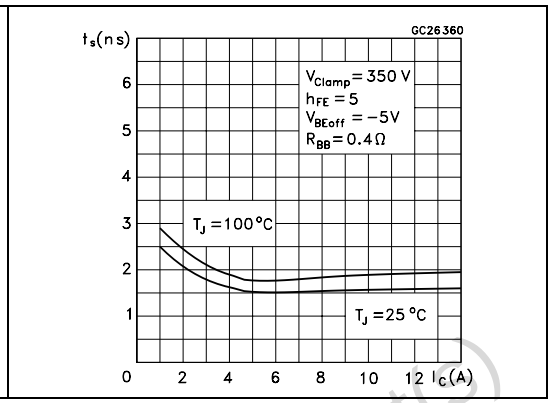


**Figure 10. Reverse biased safe operating area**

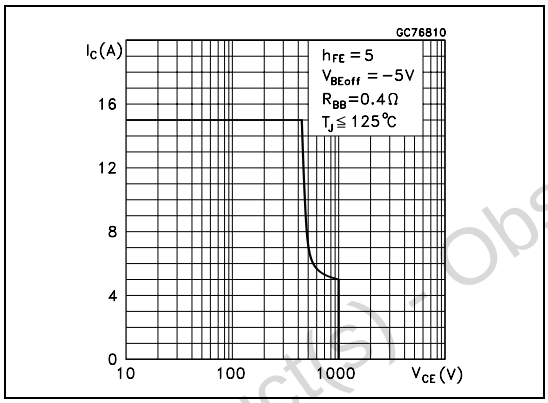


Obsolete Product(s) - Obsolete Product(s)

## 2.2 Test circuit

**Figure 11. Inductive load switching test circuit**

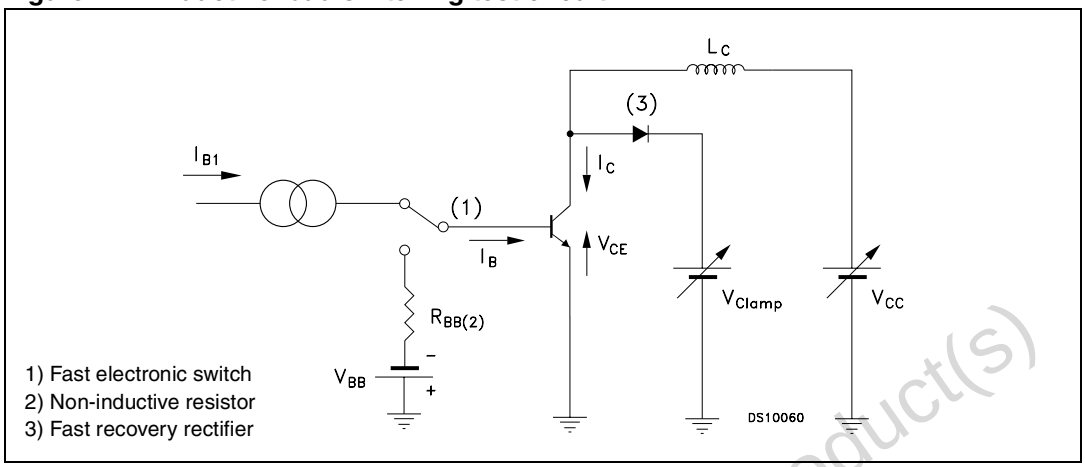


Obsolete Product(s) - Obsolete Product(s)

# 3 Package mechanical data

In order to meet environmental requirements, ST offers these devices in ECOPACK® packages. These packages have a Lead-free second level interconnect. The category of second level interconnect is marked on the package and on the inner box label, in compliance with JEDEC Standard JESD97. The maximum ratings related to soldering conditions are also marked on the inner box label. ECOPACK is an ST trademark. ECOPACK specifications are available at: www.st.com

Obsolete Product(s) - Obsolete Product(s)

| TO-247 Mechanical data | | | |
|---|---|---|---|
| Dim. | mm. | | |
| | Min. | Typ | Max. |
| A | 4.85 | | 5.15 |
| A1 | 2.20 | | 2.60 |
| b | 1.0 | | 1.40 |
| b1 | 2.0 | | 2.40 |
| b2 | 3.0 | | 3.40 |
| c | 0.40 | | 0.80 |
| D | 19.85 | | 20.15 |
| E | 15.45 | | 15.75 |
| e | | 5.45 | |
| L | 14.20 | | 14.80 |
| L1 | 3.70 | | 4.30 |
| L2 | | 18.50 | |
| øP | 3.55 | | 3.65 |
| øR | 4.50 | | 5.50 |
| S | | 5.50 | |

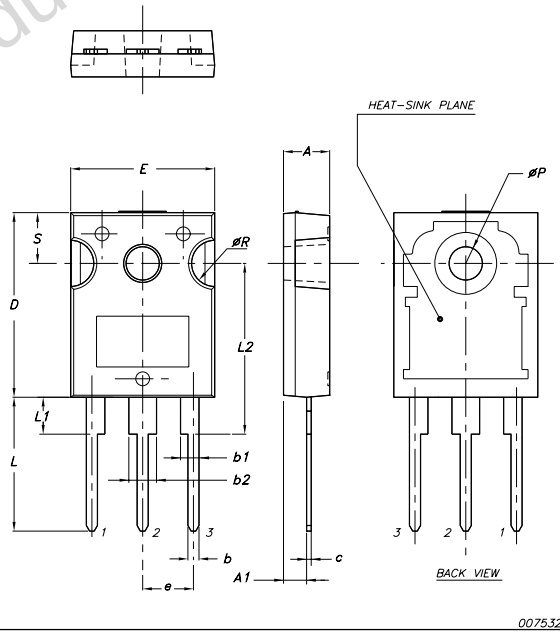


Obsolete Product(s) - Obsolete Product(s)

# 4 Revision history

**Table 5. Document revision history**

| Date | Revision | Changes |
|---|---|---|
| 01-Feb-2003 | 3 | |
| 12-Feb-2008 | 4 | Package change from TO-218 to TO-247. |

Obsolete Product(s) - Obsolete Product(s)

**Please Read Carefully:**

Information in this document is provided solely in connection with ST products. STMicroelectronics NV and its subsidiaries (“ST”) reserve the right to make changes, corrections, modifications or improvements, to this document, and the products and services described herein at any time, without notice.

All ST products are sold pursuant to ST’s terms and conditions of sale.

Purchasers are solely responsible for the choice, selection and use of the ST products and services described herein, and ST assumes no liability whatsoever relating to the choice, selection or use of the ST products and services described herein.

No license, express or implied, by estoppel or otherwise, to any intellectual property rights is granted under this document. If any part of this document refers to any third party products or services it shall not be deemed a license grant by ST for the use of such third party products or services, or any intellectual property contained therein or considered as a warranty covering the use in any manner whatsoever of such third party products or services or any intellectual property contained therein.

**UNLESS OTHERWISE SET FORTH IN ST’S TERMS AND CONDITIONS OF SALE ST DISCLAIMS ANY EXPRESS OR IMPLIED WARRANTY WITH RESPECT TO THE USE AND/OR SALE OF ST PRODUCTS INCLUDING WITHOUT LIMITATION IMPLIED WARRANTIES OF MERCHANTABILITY, FITNESS FOR A PARTICULAR PURPOSE (AND THEIR EQUIVALENTS UNDER THE LAWS OF ANY JURISDICTION), OR INFRINGEMENT OF ANY PATENT, COPYRIGHT OR OTHER INTELLECTUAL PROPERTY RIGHT.**

**UNLESS EXPRESSLY APPROVED IN WRITING BY AN AUTHORIZE REPRESENTATIVE OF ST, ST PRODUCTS ARE NOT RECOMMENDED, AUTHORIZED OR WARRANTED FOR USE IN MILITARY, AIR CRAFT, SPACE, LIFE SAVING, OR LIFE SUSTAINING APPLICATIONS, NOR IN PRODUCTS OR SYSTEMS, WHERE FAILURE OR MALFUNCTION MAY RESULT IN PERSONAL INJURY, DEATH, OR SEVERE PROPERTY OR ENVIRONMENTAL DAMAGE. ST PRODUCTS WHICH ARE NOT SPECIFIED AS “AUTOMOTIVE GRADE” MAY ONLY BE USED IN AUTOMOTIVE APPLICATIONS AT USER’S OWN RISK.**

Resale of ST products with provisions different from the statements and/or technical features set forth in this document shall immediately void any warranty granted by ST for the ST product or service described herein and shall not create or extend in any manner whatsoever, any liability of ST.

ST and the ST logo are trademarks or registered trademarks of ST in various countries.

Information in this document supersedes and replaces all information previously supplied.

The ST logo is a registered trademark of STMicroelectronics. All other names are the property of their respective owners.

© 2008 STMicroelectronics - All rights reserved

STMicroelectronics group of companies

Australia - Belgium - Brazil - Canada - China - Czech Republic - Finland - France - Germany - Hong Kong - India - Israel - Italy - Japan - Malaysia - Malta - Morocco - Singapore - Spain - Sweden - Switzerland - United Kingdom - United States of America

**www.st.com**

Obsolete Product(s) - Obsolete Product(s)